Funplay Structure Layout STR-504

CAT # STR-50504-G

Actual Size: 20’- 9” x 35’- 7”

Actual Use Zone: 32’- 9” x 47’- 7”

1007.85 Approximate Square Feet

Weight:
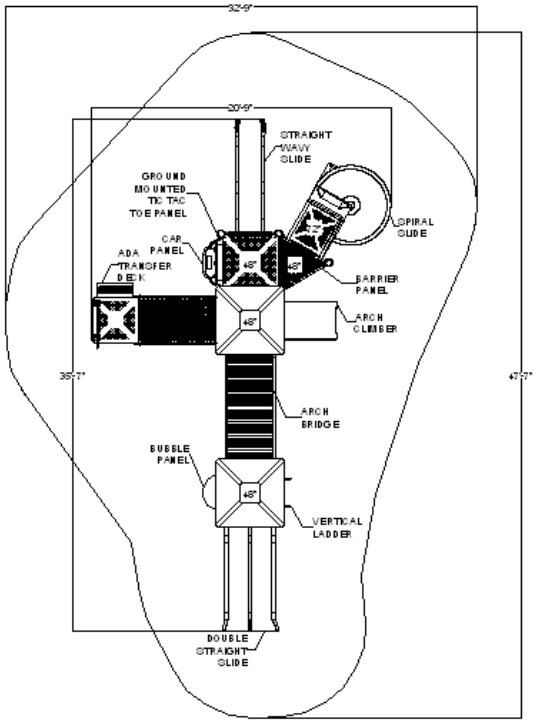
Price: